Process Capable

RoHS Compliant 2002/95/EC

REV.	ECN. NO.	APPD.

DIMENSIONS

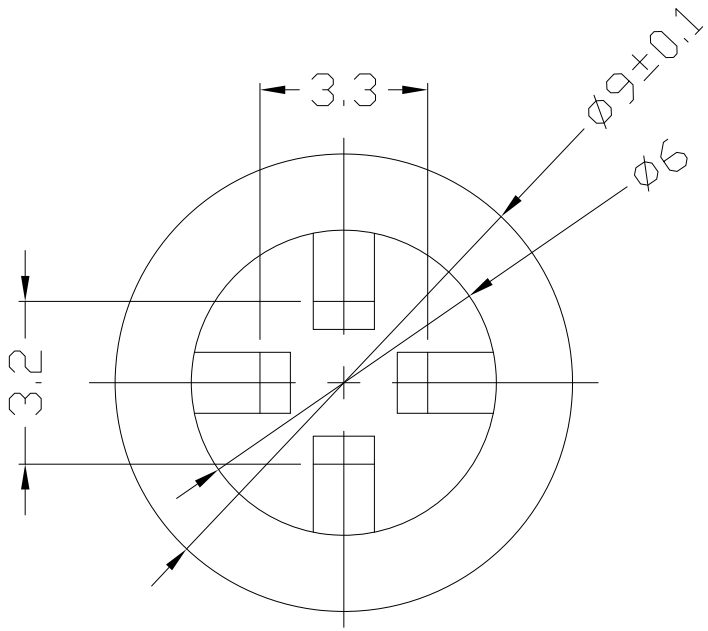

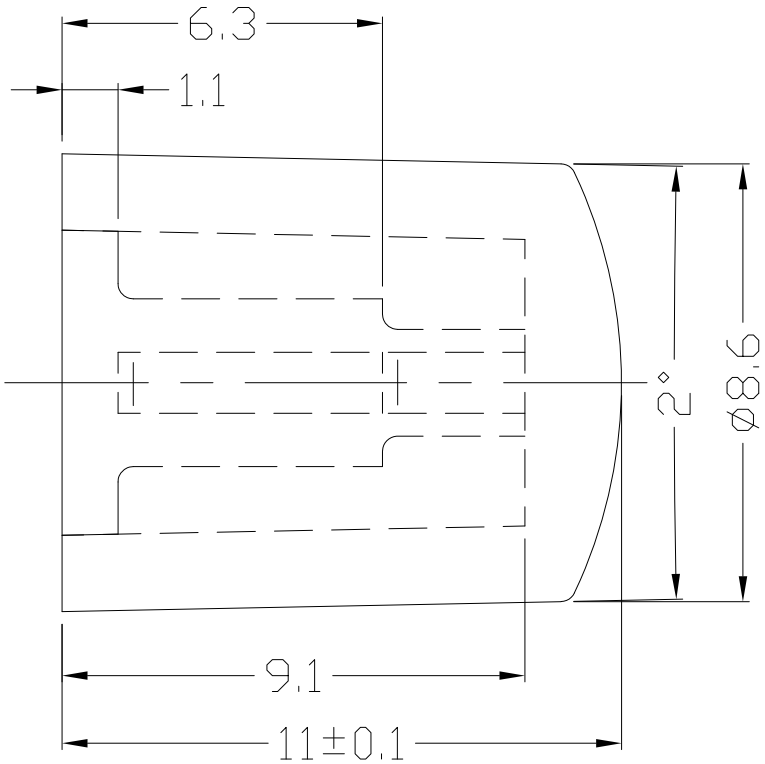

MODEL CODE

332-04R- □

CAP Color	
B	BLACK
W	WHITE
O	ORANGE
R	RED

NO.	PARTS	MATERIAL	Q'TY	FINISHING
8				
7				
6				
5				
4				
3				
2				
1	CAP	ABS	1	BLACK/WHITE/ORANGE/RED

WITHIN 10mm: ±0.05mm

OVER 10mm: ±0.1mm

THESE DRAWINGS AND SPECIFICATIONS ARE THE PROPERTY OF ACCURATE INNOTECH INC AND SHALL NOT BE REPRODUCED, COPIED OR USED IN ANY MANNER WITHOUT THE PRIOR WRITTEN CONSENT OF ACCURATE INNOTECH INC.

UNITS mm

MAT'L SEE NOTE

FINISH SEE NOTE

Q'TY

雅安科技有限公司
ACCURATE INNOTECH INC.

TITLE: CAP (FOR Knob 3.3x3.3)

PART NO.: 332-04R

DR: Ricky 2018/11/27

DWG NO.: ADS-332-04R

CHKD: Ricky 2018/11/27

APPD:

SCALE	SHEET	REV.	
1:1	1/1	A	CUSTOMER DRAWING