REV.	ECN. NO.	APPD.

Process Capable

RoHS Compliant 2002/95/EC

30 Min /1m IP-67

DIMENSIONS

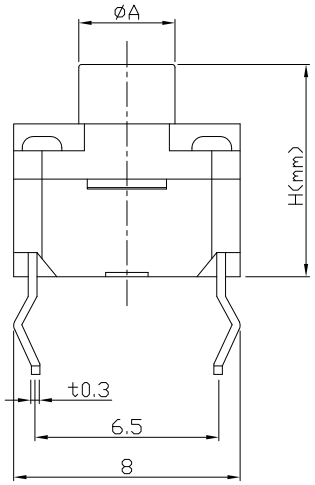

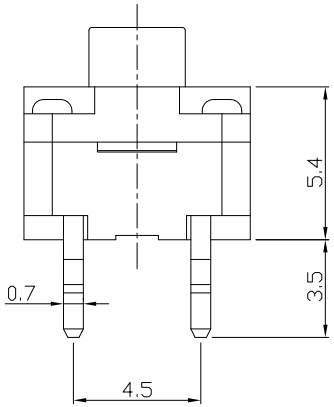

CIRCUIT DIAGRAM

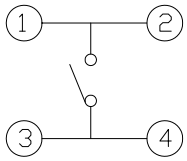

PRODUCT IMAGE

MODEL CODE

AT-1142-

	H	ØA
–	6.5	3.5
A	7.0	3.5
B	7.5	3.5
C	8.0	3.3
D	8.5	3.4
E	9.0	3.3

P.C.B MOUNTING PATTERN DIMENSION

The following soldering patterns are recommended for reflow soldering

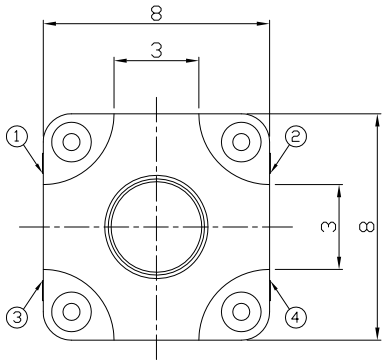

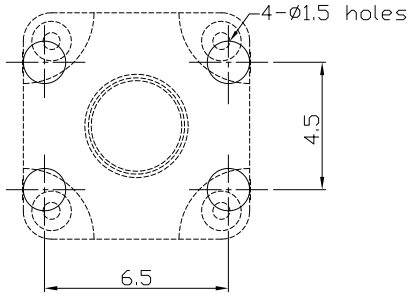

ELECTRO-MECHANICAL CHARACTERISTICS

Refer to additional specifications

Rating	DC 12V 50mA	
Contact Resistance	100mΩ Max.	
Insulation Resistance	100MΩ(DC 500V / 1 min) Min.	
Withstanding Voltage	250 VAC / min.	
Travel	0.25 ± 0.1mm	
Operating Force	160±50gf	250±50gf
Operating Life(cycles)	100,000	

.X ±0.3	X. ±2°	UNITS mm	雅安科技有限公司 ACCURATE INNOTECH INC.
		MAT'L SEE NOTE	TITLE: TACT SWITCH / waterproof
		FINISH SEE NOTE	PART NO.: AT-1142 SERIES
		Q'TY	DR: Ricky 2017/03/23
			CHKD: Ricky 2017/03/23
			APPD:
			DWG NO.: ASI-1142
			SCALE 1:1 / SHEET 1/1 / REV. A / CUSTOMER DRAWING

THESE DRAWINGS AND SPECIFICATIONS ARE THE PROPERTY OF ACCURATE INNOTECH INC AND SHALL NOT BE REPRODUCED, COPIED OR USED IN ANY MANNER WITHOUT THE PRIOR WRITTEN CONSENT OF ACCURATE INNOTECH INC.